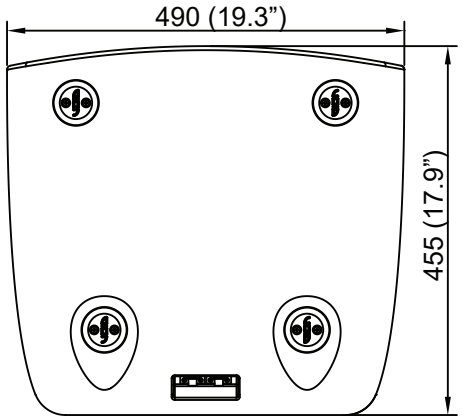
490 (19.3”)
455 (17.9”)

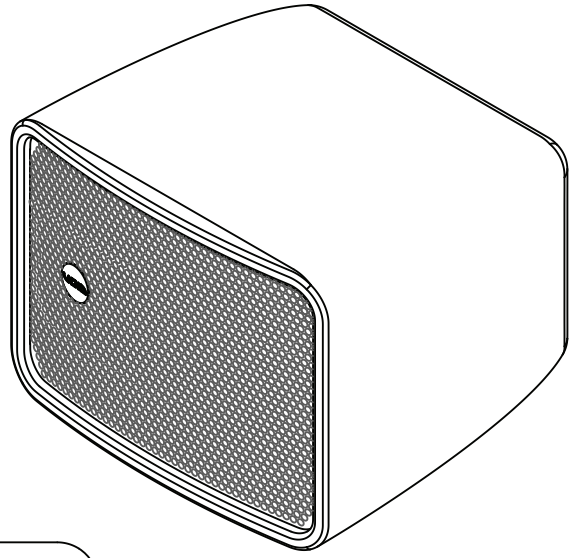

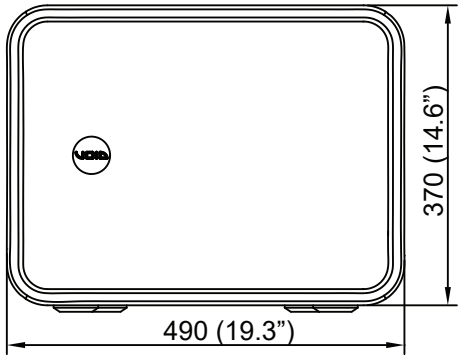
370 (14.6”)
490 (19.3”)

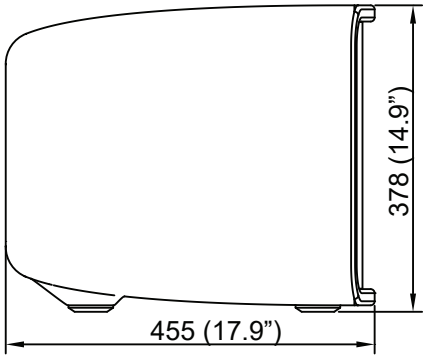
378 (14.9”)
455 (17.9”)

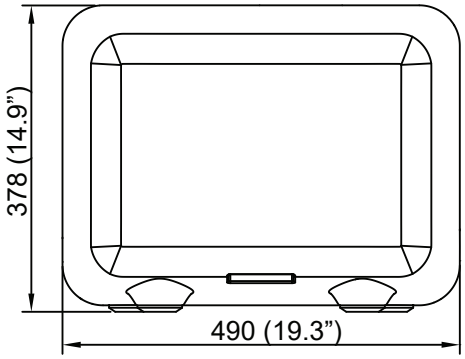
378 (14.9”)
490 (19.3”)

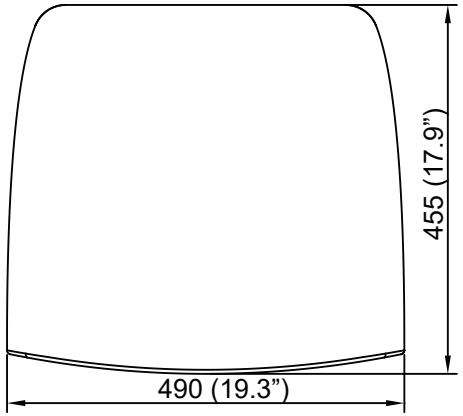
455 (17.9”)
490 (19.3”)